ADAPTABLE DC CHARGER FOR EV

KARAN PAWAR 23BEE0038

AYUSH BHARDWAJ 23BEE0118

CONTENT:

- Introduction
- Literature Review
- Problem Identified
- Objectives
- Circuit or block diagram
- Design and Specifications
- Simulation or Hardware results
- Inferences
- Reference

INTRODUCTION:

With the rise of electric vehicles (EVs), the need for efficient and adaptable charging solutions is crucial. Different EV batteries require different voltage levels, making versatile charging systems essential. This project, **"Smart Adaptive DC Charger,"** aims to design a small-scale charger capable of delivering 6V and 9V based on user selection.

The system uses a **buck-boost converter** to regulate voltage, controlled by an **Arduino microcontroller.** Users select the desired voltage via push buttons or a rotary switch, and the output is displayed on an **LCD screen.** A **MOSFET-based switching mechanism** ensures stable power delivery to the load, simulating real EV charging conditions.

This project serves as a prototype for understanding **power electronics, microcontroller-based control, and adaptive charging**. It highlights how efficient voltage regulation can contribute to sustainable energy solutions in EV technology, making charging systems more flexible and cost-effective.

LITERATURE REVIEW

1. **Evolution of EV Charging Systems:-** Electric vehicle (EV) chargers have evolved from basic constant voltage chargers to advanced adaptable chargers. Traditional chargers relied on fixed voltage levels, which could lead to inefficiencies in charging different battery types. Modern EV chargers now incorporate smart control systems that adjust output based on battery requirements, improving efficiency and extending battery life.

2. **Role of Buck-Boost Converters in Power Electronics:-** Buck-boost converters are widely used in power electronics due to their ability to step up or step down voltage efficiently. Studies highlight their advantages in applications requiring variable voltage outputs, such as EV charging (Bose, 2017). These converters are controlled using microcontrollers like Arduino or more advanced embedded systems to achieve desired output voltages dynamically.

3. **Microcontroller-Based Voltage Control in Power Systems:-** Arduino-based voltage regulators have been researched extensively for their effectiveness in low-cost and adaptable power systems. Studies show that microcontrollers can be programmed to read user inputs, control MOSFETs, and regulate DC-DC converters with high accuracy (Gupta & Sharma, 2019). Such systems are widely used in battery charging, solar power applications, and power supply regulation.

4. **User-Selectable Voltage Systems in Power Electronics:-** The concept of user-selectable voltage control is implemented in several consumer electronics and industrial applications. Research indicates that push-button or rotary switch-based systems are effective in providing user control over power delivery, making devices more adaptable. This approach is beneficial in scenarios where different devices require different operating voltages

BLOCK DIAGRAM

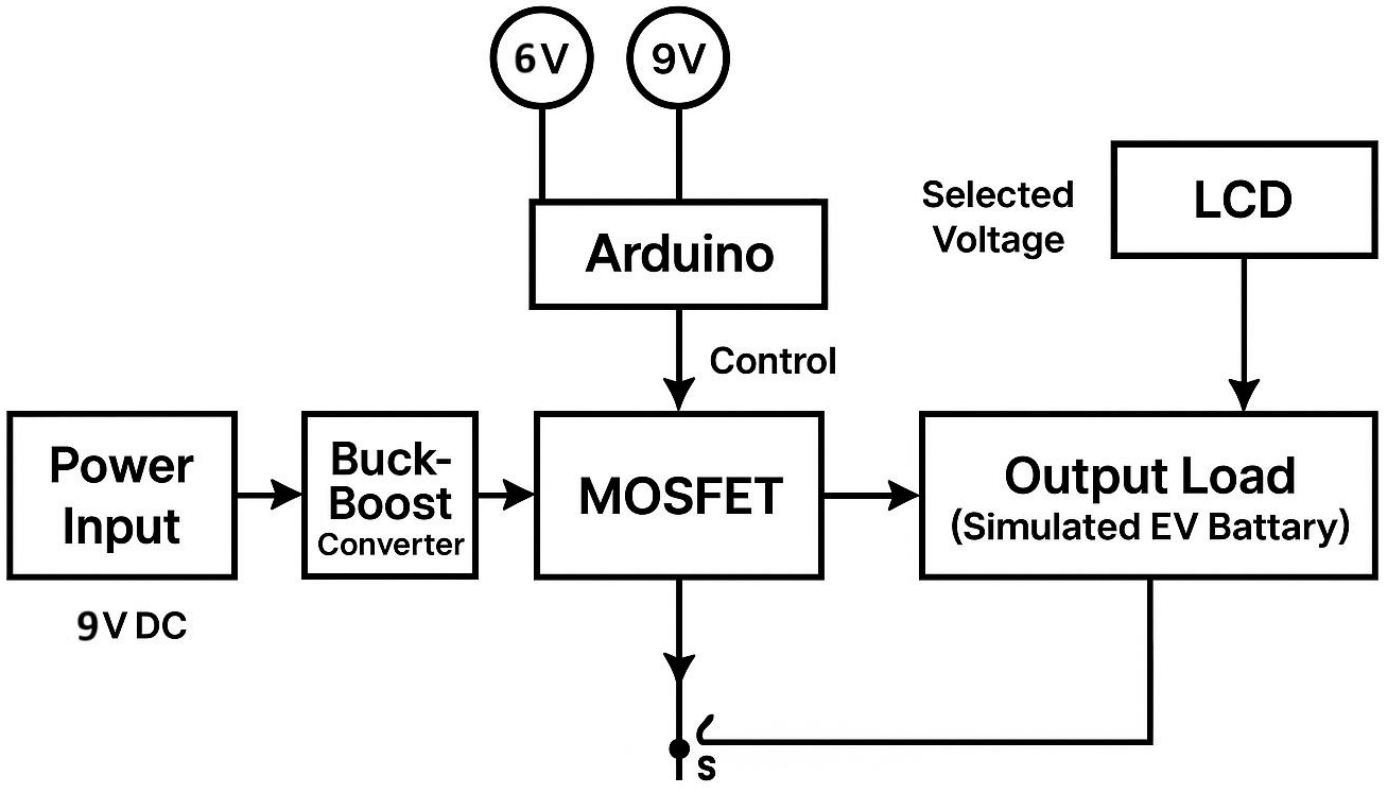

Small-scale adaptable DC charge

WORKING PRINCIPLE

The small-scale adaptable DC charger operates on the principle of voltage regulation using a **buck-boost converter**, controlled by an **Arduino microcontroller**. The charger is capable of outputting either **6V or 9V DC**, based on the user's selection, thereby simulating how real EV chargers adapt to the voltage requirements of different electric vehicles.

1. **Power Input and Conversion:-** The system is powered by a stable **9V DC source** (such as a battery pack or DC adapter). This input is fed into a **buck-boost converter,** which is capable of both stepping up and stepping down the voltage as needed.

2. **User Input and Voltage Selection:-** A **voltage selection mechanism**, such as push buttons or a rotary switch, allows the user to choose between 6V and 9V output levels. Each button corresponds to a specific voltage setting.

   When the user presses a button:

   - The Arduino reads the input from the button (using digital input pins).
   - It determines which voltage level has been selected (6V or 9V).

3. Voltage Regulation and Control

Based on the user's input:

- The Arduino sends a control signal (PWM or digital output) to adjust the **buck-boost converter** accordingly.
- A **MOSFET** is used to switch the output line ON or OFF under Arduino control, ensuring that power is only delivered when the correct voltage is set and stable.
- If required, a **voltage sensor module** (like a voltage divider or dedicated sensor) feeds real-time output voltage data back to the Arduino for feedback control and monitoring.

4. Output to Load:- The regulated output voltage (either 6V or 9V) is then supplied to a **dummy load**, such as a small DC motor,This load acts as a simulated electric vehicle battery, demonstrating how the charger would interact with real EVs.

5. Display and Feedback System

An **LCD display module** (e.g., 16x2 or I2C-based) is used to:

- Show the currently selected voltage,
- Optionally display the actual output voltage (if a voltage sensor is used),
- Provide system status or error messages.

DESIGN AND SPECIFICATIONS

Parameter	Specification
Project Name	Small-Scale Adaptable DC Charger
Input Voltage	9V DC (Battery or Adapter)
Output Voltage Levels	6V, 9V (User Selectable)
Voltage Regulation	Buck-Boost Converter (XL6009 Module)
Voltage Selection	Push Buttons (2 units - one for 6V, one for 9V)
Controller	Arduino Uno
Display Module	16x2 LCD with I2C Interface
Switching Device	IRFZ44N N-channel MOSFET (for output control)
Output Load	Dummy Load (LED strip, small DC motor, or USB-powered device)
Feedback Display	Selected voltage shown on LCD
Optional Sensing	Voltage Sensor (for feedback, optional)
Power Conversion Type	Buck-Boost (Step-Up/Step-Down)
Enclosure (optional)	Small plastic/3D-printed case for safety and portability
Applications Simulated	EV battery charging scenarios

BUCK-BOOST CONVERTER

This DC-DC switching boost converter is **capable of driving a 4A load** with excellent line and load regulation. The main switching component XL6009 IC is available in fixed output voltages of 3.3 V, 5V, 12V, and an adjustable output version. It is an efficient switching regulator and the output efficiency is significantly higher in comparison with the popular boost regulators. At higher input voltages, the regulator operates at a switching frequency of 400kHz thus allowing the overall board size to be smaller and space-saving.

The XL6009 module is a DC to DC BUCK-BOOST converter module that operates at a switching frequency of 400kHz. In such high frequency, it provides smaller sized filter components compared with low frequency switching regulators. It is the upgraded version of the LM2577 based module.

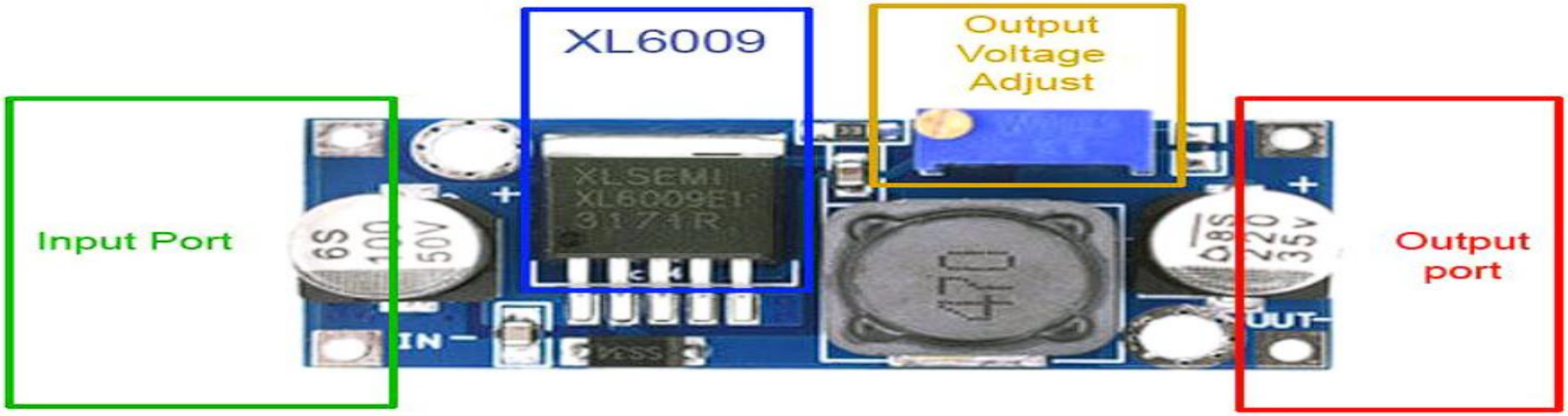

The XL6009-Adj based **DC-DC step-up module** offers 4A of rated current from a 3 - 32V of the input voltage. The power module has a potentiometer to adjust the output voltage according to the user needs. Although the module uses a **PCB based heat sink** it is recommended to use an additional heat sink if the output power rating exceeds 15W. The module also offers a very high conversion efficiency of less than 94% with a 0.5% load regulation that can be an excellent choice for audio electronics-related products. Higher conversion efficiency enables battery-operated applications as well.

Pin Description of XL6009 Power module Board

Pin Name	Description
IN+	Positive input (Unregulated or Regulated)
IN-	Negative input (Ground)
OUT+	Positive Output (Regulated)
OUT-	Negative Output (Ground)

CIRCUIT DIAGRAM

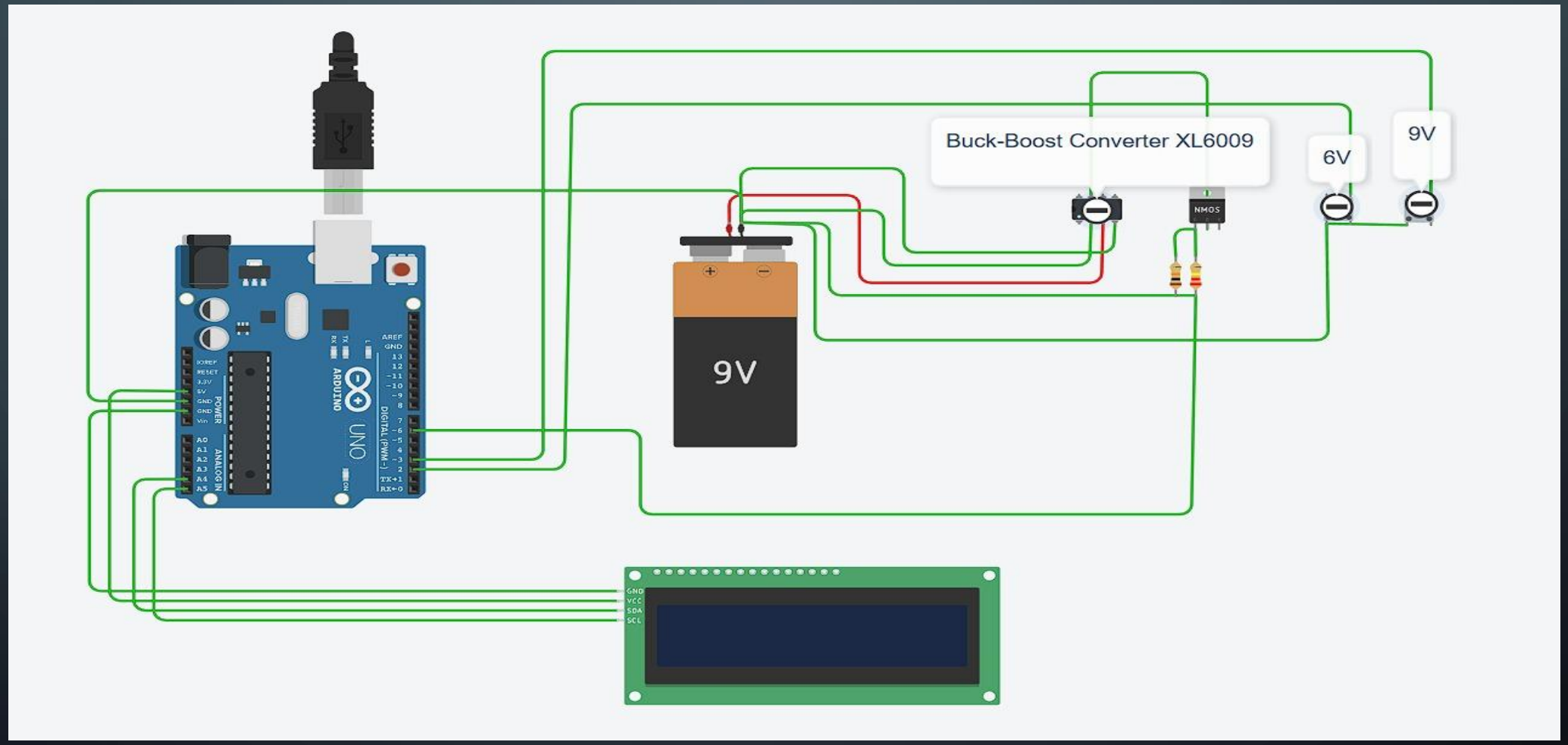

CIRCUIT CONNECTIONS:-

1. Push Buttons (Voltage Selection)

- **Button 1 (6V):**
  - One side to **Arduino D2**
  - Other side to **GND**

Button 2 (9V):

- One side to **Arduino D3**
- Other side to **GND**

2. Buck-Boost Converter

- **Input (+) → 9V from battery or adapter**
- **Input (–) → GND**
- **Output (+) → Drain of MOSFET**
- **Output (–) → GND**

3. MOSFET Control (Switching Load)

- **Drain** → Positive terminal of **load**
- **Source → Load positive terminal**
- **Gate → Arduino D9** through 220Ω resistor
- Add a 10kΩ **pull-down resistor** between Gate and GND

4. Load (Simulated EV)

- Positive terminal → MOSFET Source
- Negative terminal → GND

5. LCD (I2C 16x2 Display)

- VCC → 5V (Arduino)
- GND → GND
- SDA → A4 (Uno/Nano)
- SCL → A5 (Uno/Nano)

6. Power Supply

- 9V Adapter/Battery:
  - +ve → Vin of buck-boost converter
  - –ve → Common GND

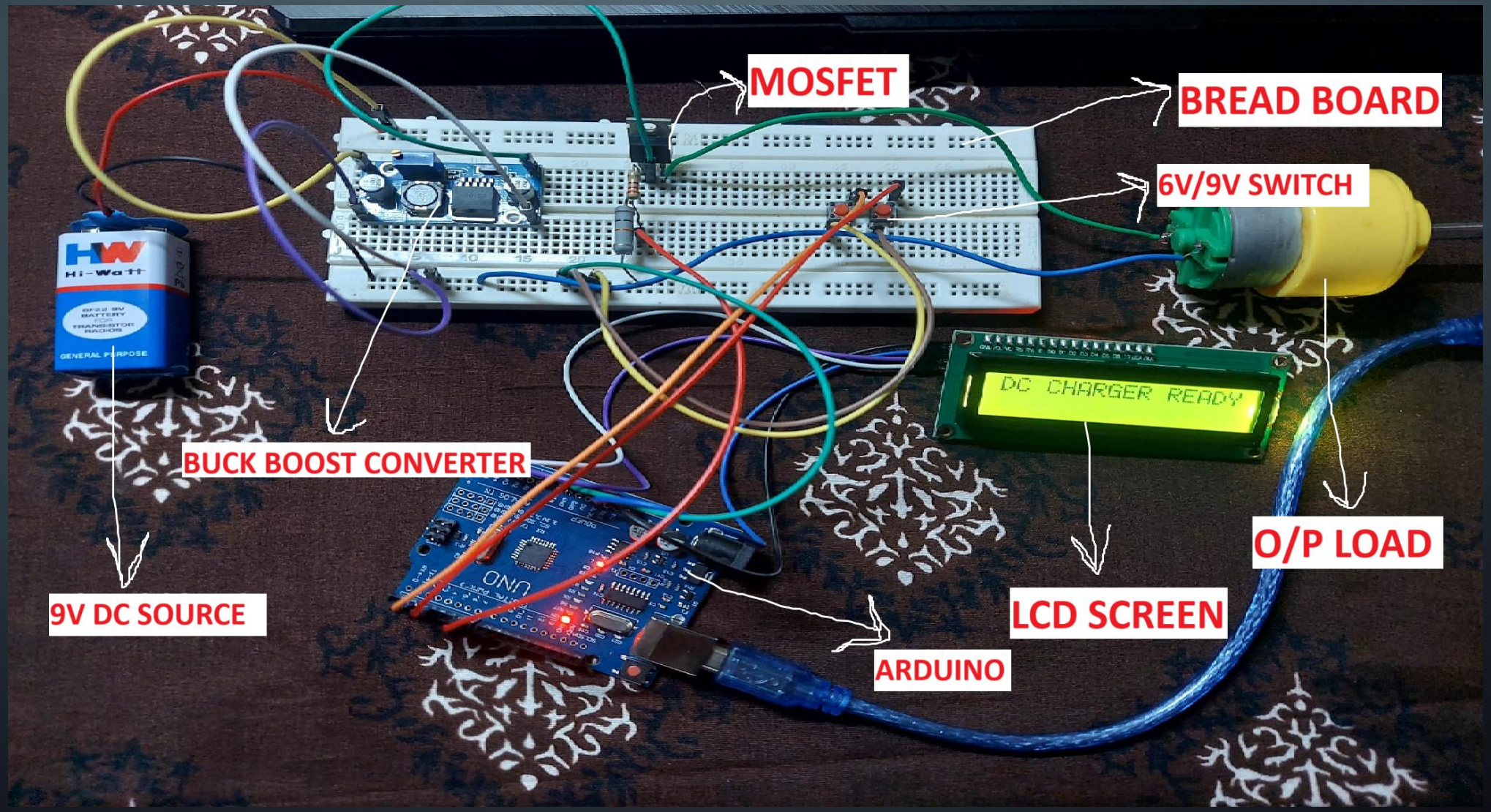
MOSFET
BREAD BOARD
6V/9V SWITCH
BUCK BOOST CONVERTER
9V DC SOURCE
LCD SCREEN
O/P LOAD
ARDUINO
DC CHARGER READY
Hi-Watt
UNO

SIMULATION CODE FOR ARDUINO:

projecttt.ino

```
#include <Wire.h>
#include <LiquidCrystal_I2C.h>

// LCD object setup (address 0x27, 16 columns, 2 rows)
LiquidCrystal_I2C lcd(0x27, 16, 2);

// Pin Definitions
const int button6V = 2;
const int button9V = 3;
const int mosfetPin = 6;  // Controls IRF540 gate

// Track selected voltage
int selectedVoltage = 0;

void setup() {
  // Button pins
  pinMode(button6V, INPUT_PULLUP);
  pinMode(button9V, INPUT_PULLUP);

  // MOSFET output control
  pinMode(mosfetPin, OUTPUT);
  digitalWrite(mosfetPin, LOW); // OFF initially

  // LCD setup
  lcd.begin(16, 2);
  lcd.backlight();
  lcd.setCursor(0, 0);
  lcd.print("DC Charger Ready");
}

void loop() {
  // Read button states (active LOW)
  if (digitalRead(button6V) == LOW) {
    selectedVoltage = 6;
    applyVoltage();
```

```
  }
  else if (digitalRead(button9V) == LOW) {
    selectedVoltage = 9;
    applyVoltage();
  }
}

void applyVoltage() {
  digitalWrite(mosfetPin, HIGH); // Enable output
  lcd.clear();
  lcd.setCursor(0, 0);
  lcd.print("Voltage Selected:");
  lcd.setCursor(0, 1);
  lcd.print(String(selectedVoltage) + "V Output");
  delay(2000); // Wait before returning
}
```

HARDWARE RESULTS

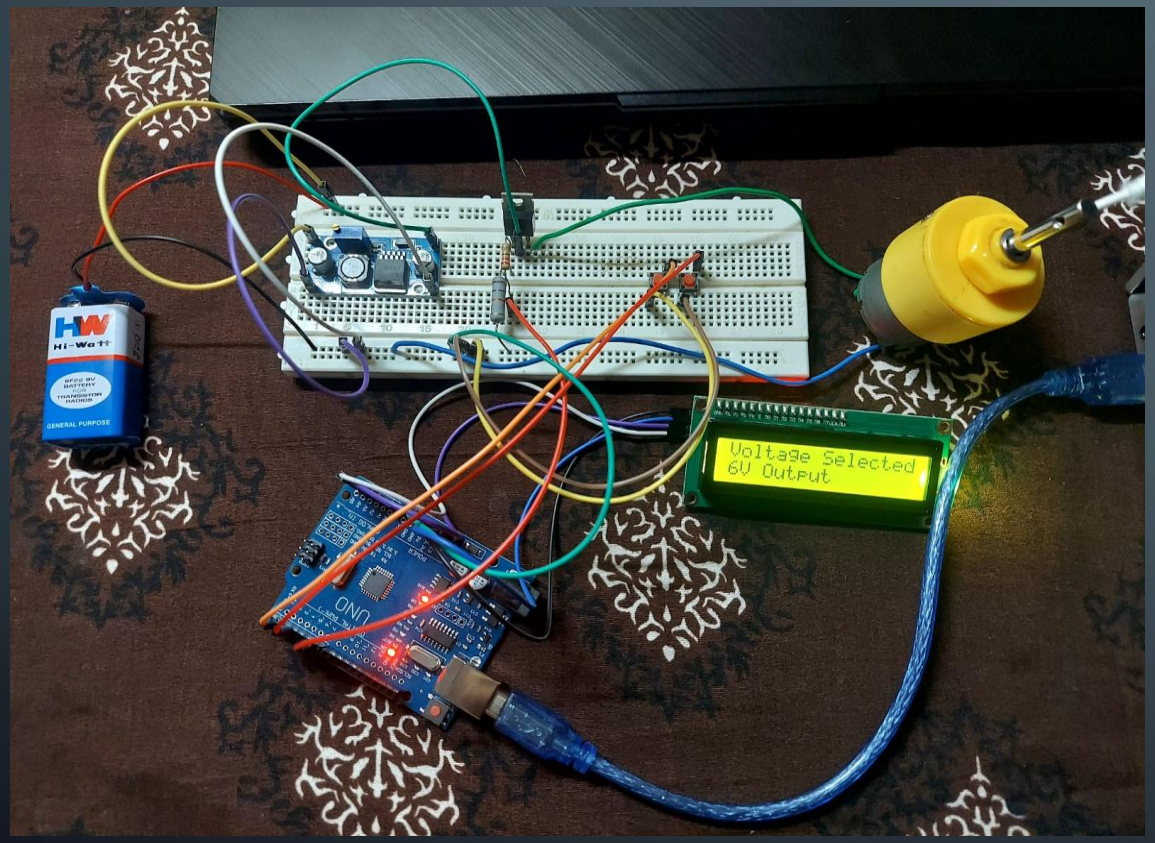

6V OUTPUT

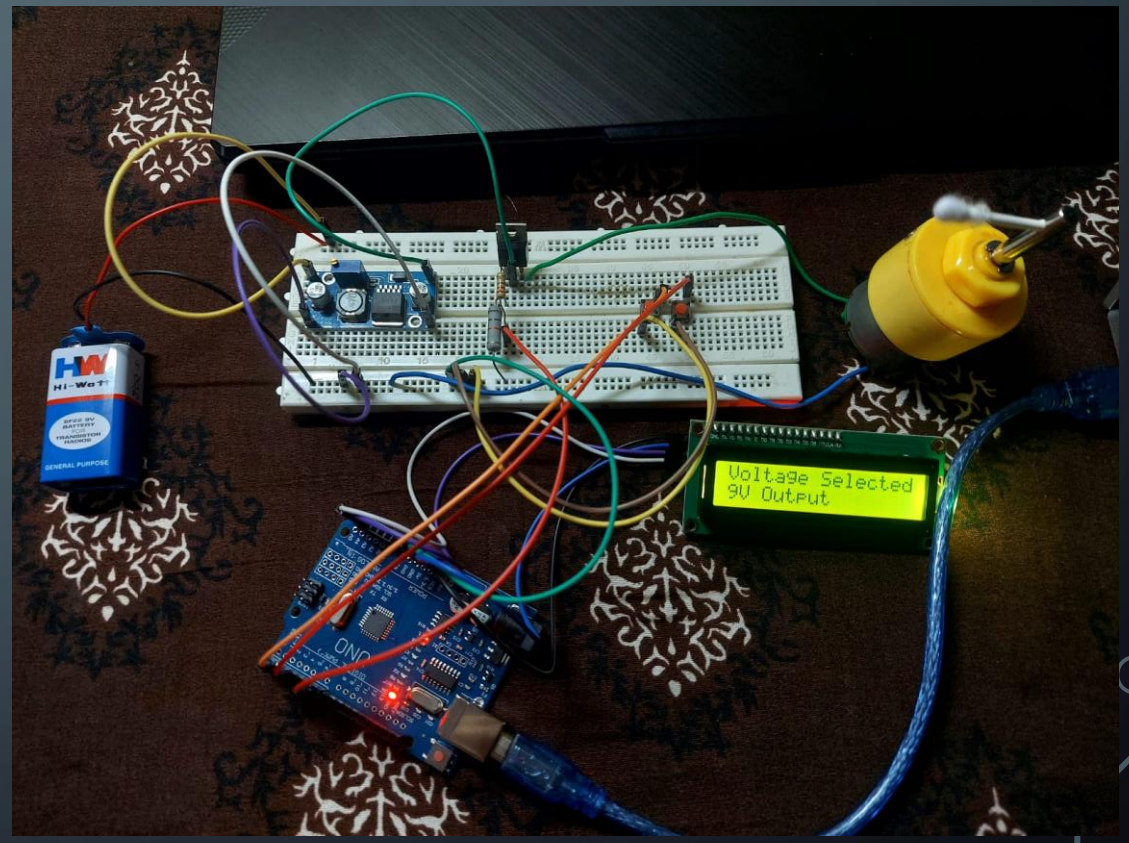

9V OUTPUT

GRAPH

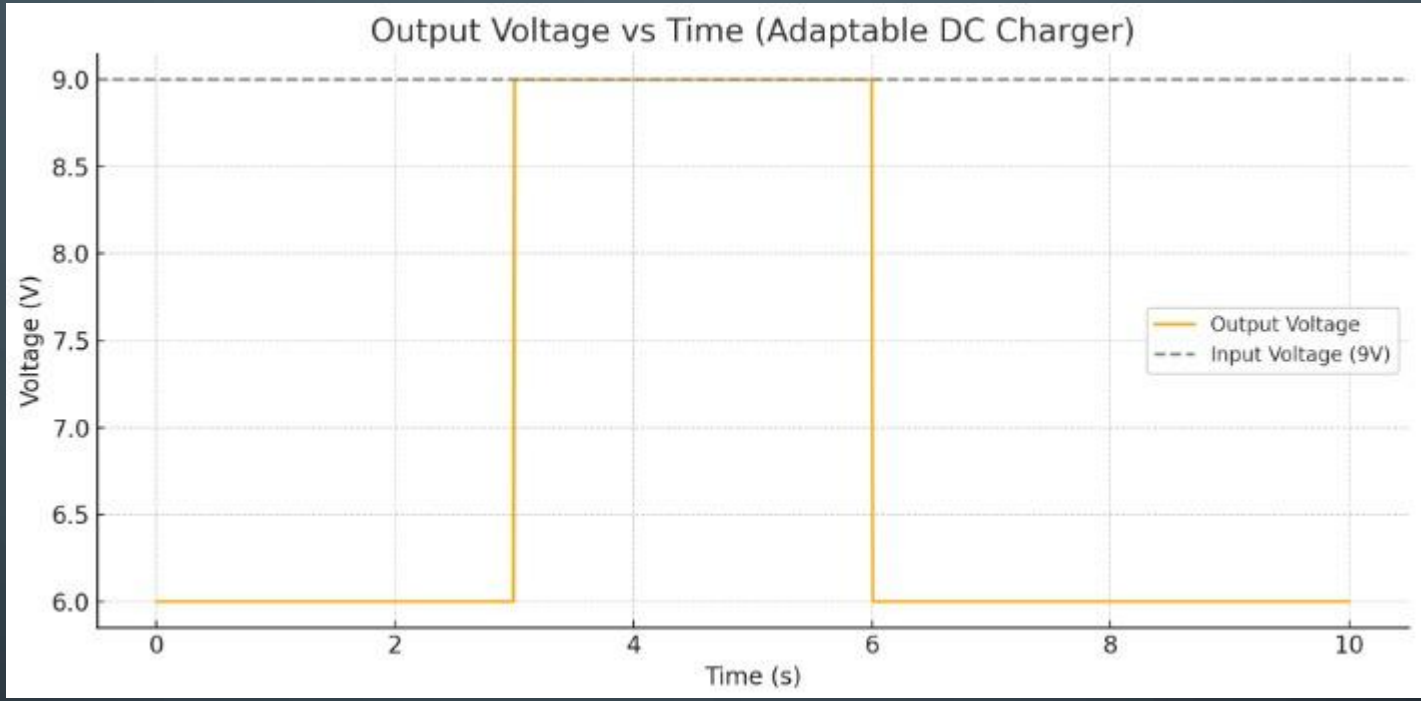

0–3s: User selects 6V, so the buck-boost steps down the voltage.
3–6s: User switches to 9V, matching the input.
6–10s: Back to 6V.

PROBLEMS IDENTIFIED

Fixed Voltage Chargers Lack Flexibility:
Traditional EV chargers operate at fixed voltage levels, making them incompatible with different battery requirements.

Inefficient Power Conversion
Without an adaptable system, energy is often wasted due to overvoltage or improper voltage regulation, reducing charging efficiency.

Limited User Control
Many small-scale chargers do not allow users to select voltage levels, restricting their usability for different devices.

Safety Risks (Overvoltage & Overcurrent)
Unregulated charging can damage batteries or electronic devices due to excessive voltage fluctuations.

INFERENCES

Multi-voltage Output is Crucial
Adaptable DC chargers are necessary to support the growing variety of EV battery configurations. Designing a charger that can automatically adjust voltage and current makes it more universal and user-friendly.

Battery Safety Must Be a Priority
Including protection features like overvoltage, thermal monitoring, and current limiting is essential to improve battery life and reduce risk during charging.

User-Centric Flexibility is Valuable
Chargers offering fast and slow modes based on user preferences and grid availability can significantly improve practicality and satisfaction for end users.

REFRENCES

A fixed DC charger may not be suitable for multiple types of EVs. Adaptable DC chargers overcome this by adjusting output voltage and current to suit a wide range of batteries, from e-bikes to electric cars (Patel & Joshi, 2020).

Overcharging and overheating are common issues in uncontrolled charging systems. Adaptable DC chargers include safety features such as **overvoltage, overcurrent, and thermal protection,** ensuring extended battery life and user safety (Singh & Verma, 2021).

With the growing trend toward **renewable energy integration**, adaptable DC chargers are capable of handling **variable DC input from solar panels or wind turbines,** converting it into a stable and usable output for EVs (Kumar & Rathi, 2020).